RickRyan.com

Staging requirements
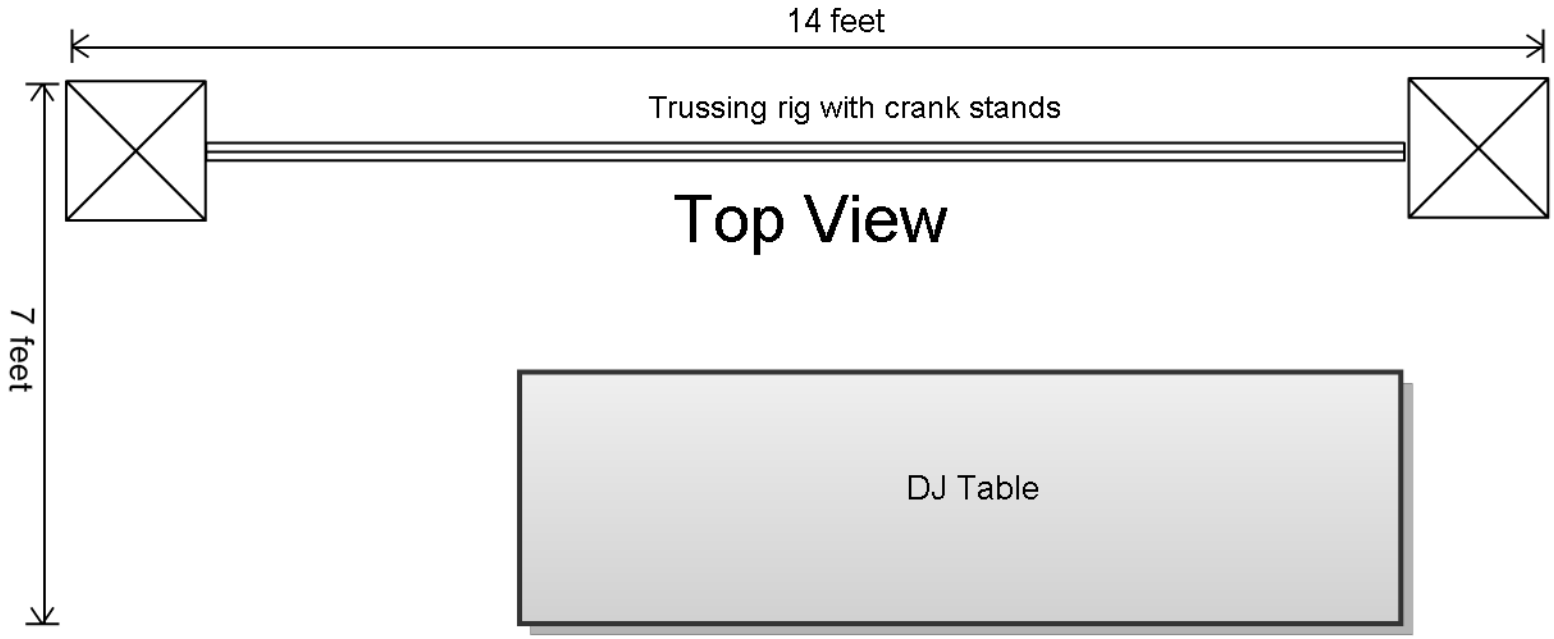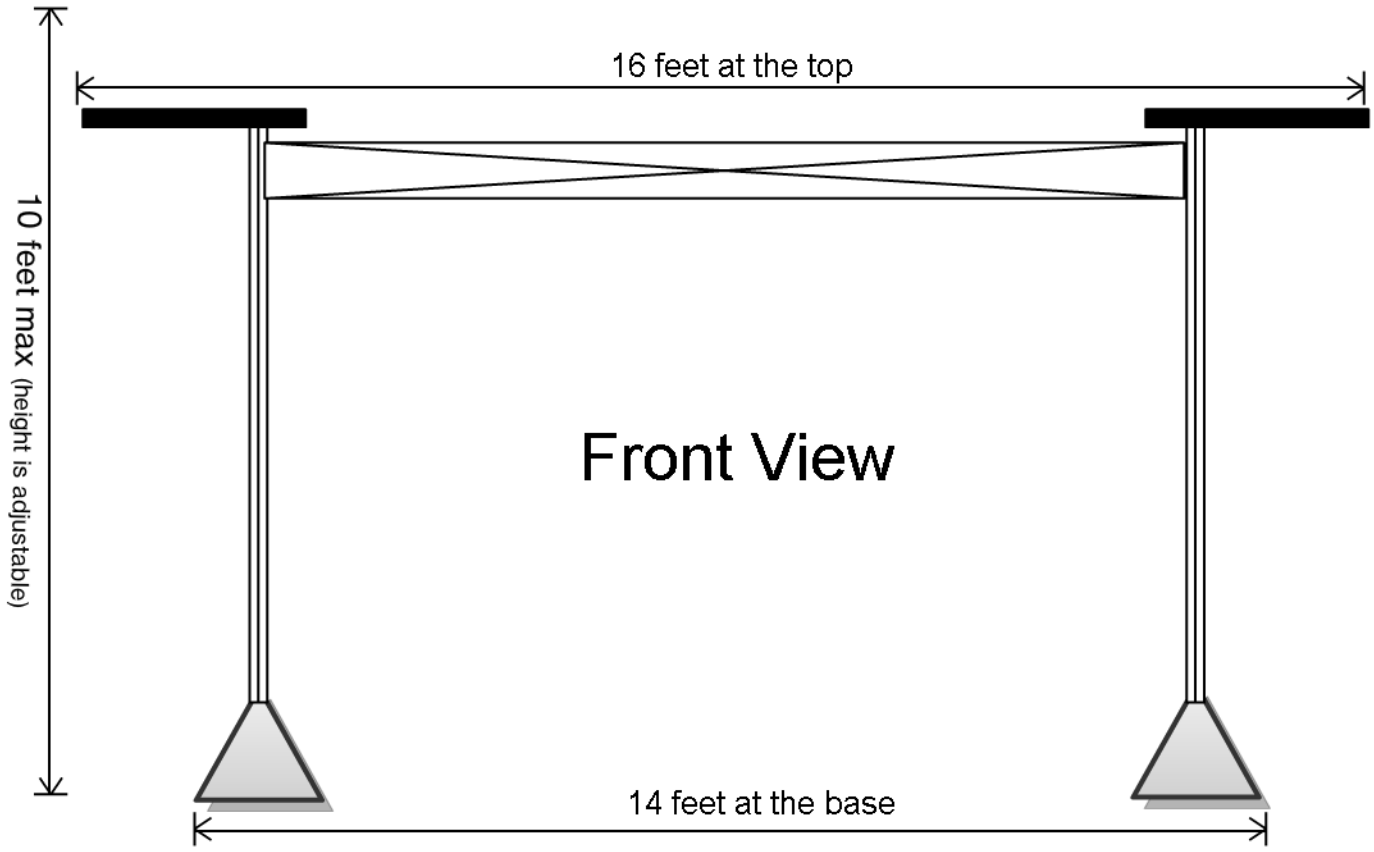
Note: This is a typical DJ staging setup. We normally use a standard 10-foot truss span, mobile DJ rig. Please let us know, prior to your event, if you need a different configuration to fit your available space.